MRAC Series

Miniature Rectangular, Removable Contacts

FEATURES

- Closed Entry Removable Socket and Pin Contacts.
- Connector Inserts with 9 to 104 Contacts.
- Quick Crimp ... Snap in Place!
- To remove ... insert removal tool — "Push Out" Contact!

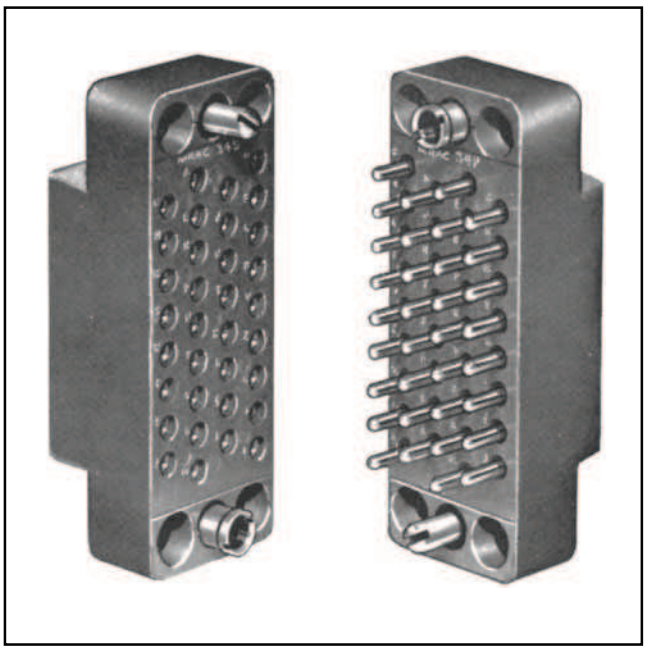

The MRAC Series is an important extension of the MRA line featuring a variety of crimp and solder removable contact styles. Except for body thickness, they are similar and interchangeable with the MRA Series.

Removable contacts offer a substantial savings of time, labor and a great flexibility in the choice of circuitry. The contact is easily removed with the hand tool depicted and then placed by hand or with a simple insertion tool.

SPECIFICATIONS

Current Rating: Up to 13 amps

No. of Contacts: 9, 14, 18, 20, 26, 34, 41, 42, 50, 66, 75, 104

Contacts: Must be ordered separately. Select from crimp, solder, dip solder, shielded or Wire-Wrap termination contacts. See 100 Series contact section.

Contact Identificaiton: Standard contact identification is alphabetical except for MRAC66 and 75 which have numerical identification. To order numerical identification on MRAC 34, 50 or 104, specify MNAC**P or S.

Electrical Data: Meets high potential performance of MIL-C-28748. The dielectric withstanding voltage is one minute electrification at 2000 VAC (sea level).

Dielectric: MRAC Series: Standard glass filled diallyl phthalate, per MIL-M-14, SDG-F, color gray.

Qualification: Military Versions are QPL'd to M28748/3 and M28748/4.

Polarization: Gold plated guides provide positive polarization. Polarized nickel-plated brass and/or passivated stainless steel with anodized aluminum knobs available.

Hoods: Anodized aluminum. May be applied to either plug or receptacle. Both top and side opening hoods available.

MILITARY CROSS REFERENCE

CATALOG NO.		CATALOG NO.	
MRAC 9P	MS 14007-1	MRAC 42P	MS 18180-1
MRAC 9S	MS 14006-1	MRAC 42S	MS 18181-1
MRAC 14P	MS 18174-1	MRAC 50P	MS 18182-1
MRAC 14S	MS 18175-1	MRAC 50S	MS 18183-1
MRAC 20P	MS 18176-1	MRAC 66P	MS 18184-1
MRAC 20S	MS 18177-1	MRAC 66S	MS 18185-1
MRAC 26P	MS 14008-1	MRAC 75P	MS 18187-1
MRAC 26S	MS 14005-1	MRAC 75S	MS 18188-1
MRAC MS34P	MS 18178-1	MRAC 104P	MS 18189-1
MRAC MS34S	MS 18179-1	MRAC 104S	MS 18190-1

Winchester

62 Barnes Industrial Road North, Wallingford, Connecticut 06492 Phone:(203)741-5400 Fax:(203)741-5500 www.winchesterelectronics.com

MRAC Series

Miniature Rectangular, Removable Contacts

OUTLINE

Dimensions are for reference only and are subject to change. Outline drawings on request.

Drawings and corresponding part numbers show G type guide sockets. It is recommended that guides be used wherever possible for positive polarization and for protection of contacts except for the MRAC 104 where the jackscrew locking device is recommended.

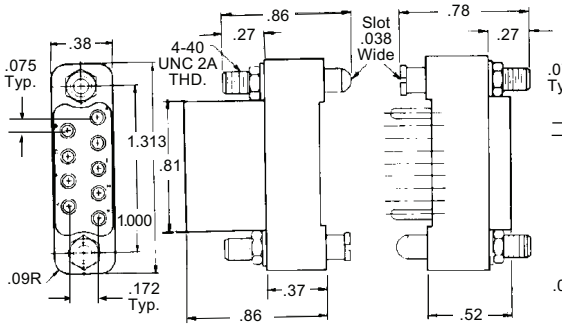

MRAC 9S-G **MRAC 9P-G**

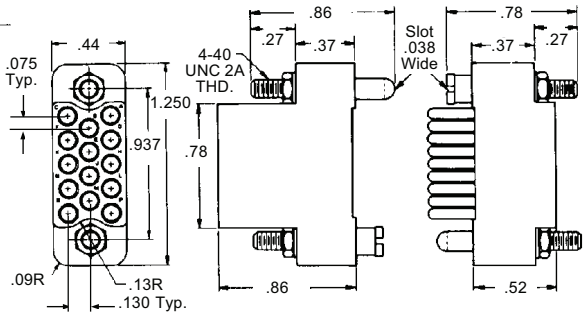

MRAC 14S-G **MRAC 14P-G**

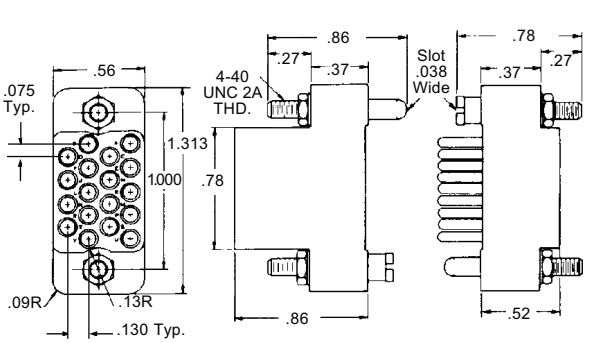

MRAC 18S-G **MRAC 18P-G**

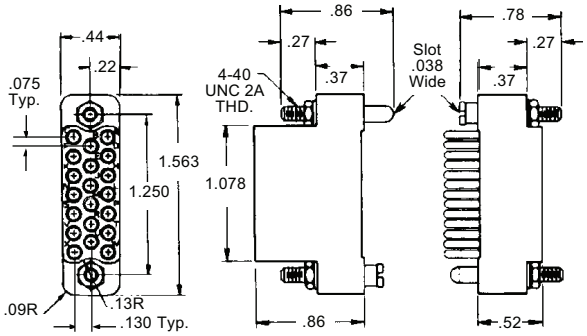

MRAC 20S-G **MRAC 20P-G**

PHYSICAL DATA

Plug Code No.	Recepticle Code No.	No. of Contacts	Wt. in Ozs. w/o Contacts		Plug Code No.	Recepticle Code No.	No. of Contacts	Wt. in Ozs. w/o Contacts	
			Plug	Rec.				Plug	Rec.
MRAC9P	MRAC9S	9	.15	.17	MRAC41	MRAC41S	41	.5	.7
MRAC14P	MRAC14S	14	.17	.2	MRAC42P	MRAC42S	42	.5	.7
MRAC18P	MRAC18S	18	.17	.2	MRAC50P	MRAC50S	50	.6	.85
MRAC20P	MRAC20S	20	.17	.25	MRAC66P	MRAC66S	66	.7	1.05
MRAC26P	MRAC26S	26	.42	.67	MRAC75P	MRAC75S	75	.9	1.3
MRAC34P	MRAC34S	34	.42	.67	MRAC104P	MRAC104S	104	1.2	1.78

GUIDE SOCKETS

How To Order: *To obtain "K" or "N" guides in place of the standard "G" type, substitute the desired socket style code letter ("K" or "N") for "G" in both the Plug and Receptacle Code Numbers.*

Guide Socket Code Letter	Actual Size Photo	
G*	For General Use Phosphor Bronze	Standard Guide Pin mates with all types Brass
K	For High Electrical Conductivity Beryllium Copper	
N*	For Extra Mechanical Strength Brass	

** For passivated stainless steel add SS suffix*

OUTLINE

Dimensions are for reference only and are subject to change. Outline drawings on request.

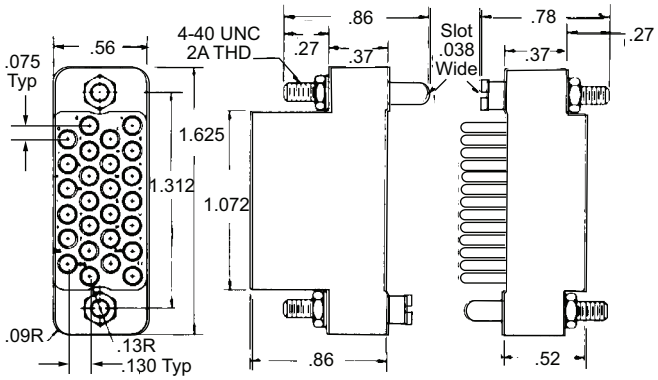

MRAC 26S-G **MRAC 26P-G**

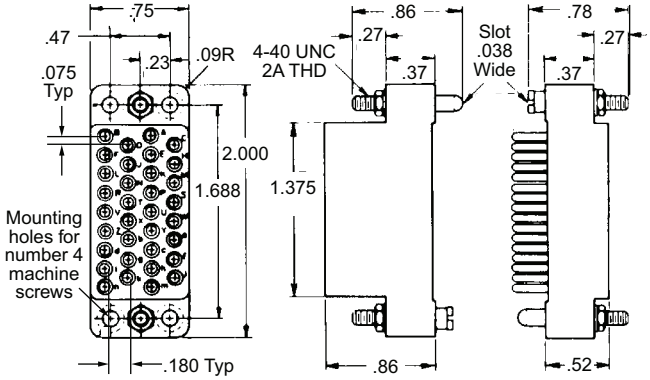

MRAC 34S-G **MRAC 34P-G**

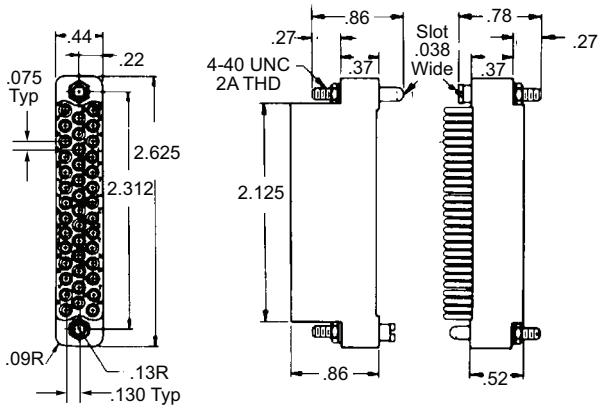

MRAC 41S-G **MRAC 41P-G**

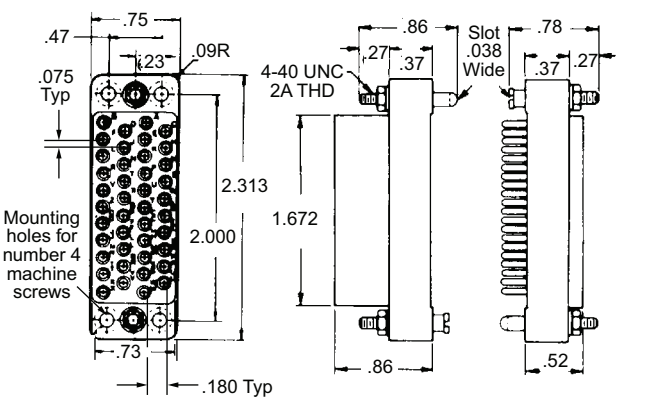

MRAC 42S-G **MRAC 42P-G**

Drawings and corresponding part numbers show G type guide sockets except for the MRAC104P and S which show JT hardware.

Mounting Note: Connectors MRAC 26, MRAC 20 and smaller, use guides for mounting in a hood or on a panel. Connectors MRAC 34, MRAC 42, MRAC 50, MRAC 66, and MRAC 75 use four #4 machine screws, in addition to guides, for mounting in a hood or on a panel. Guides are not recommended for use with MRAC 104. MRAC 104 uses four #6 machine screws for mounting.

**For numerical contact identification instead of alphabetical, order MNAC._____P or S available in sizes 34, 50 and 104. Example MNAC 34P. MRAC 66 and 75 have numerical contact identification as standard.*

OUTLINE

Dimensions are for reference only and are subject to change. Outline drawings on request.

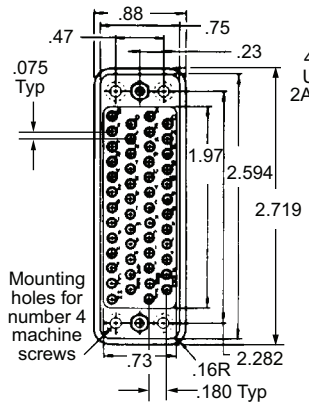

MRAC 50S-G

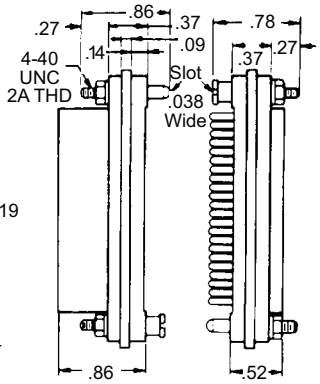

MRAC 50P-G

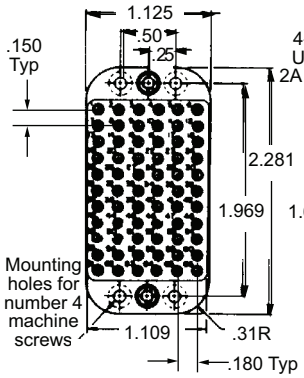

MRAC 66S-G

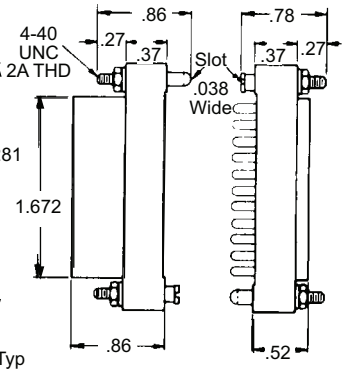

MRAC 66P-G

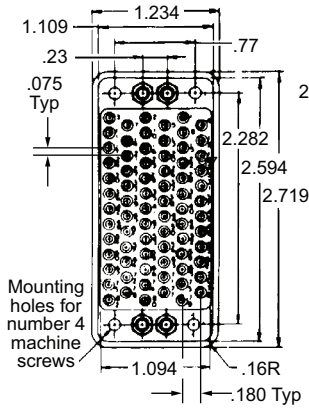

MRAC 75S-G

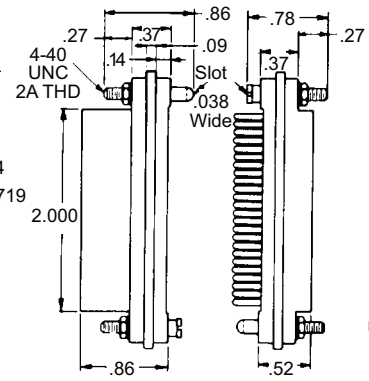

MRAC 75P-G

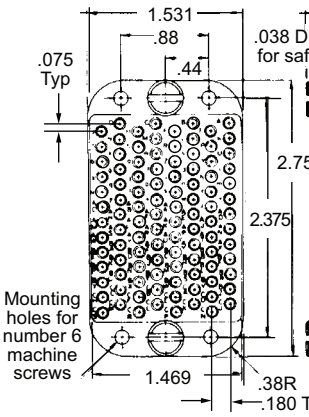

MRAC 104S-JT *

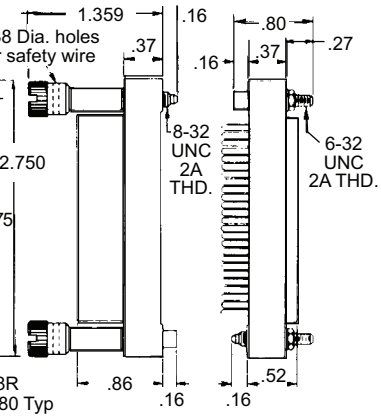

MRAC 104P-J

Drawings and corresponding part numbers show G type guide sockets except for the MRAC104P and S which show JT hardware.

Mounting Note: Connectors MRAC 26, MRAC 20 and smaller, use guides for mounting in a hood or on a panel. Connectors MRAC 34, MRAC 42, MRAC 50, MRAC 66, and MRAC 75 use four #4 machine screws, in addition to guides, for mounting in a hood or on a panel. Guides are not recommended for use with MRAC 104. MRAC 104 uses four #6 machine screws for mounting.

**For numerical contact identification instead of alphabetical, order MNAC._____P or S available in sizes 34, 50 and 104. Example MNAC 34P. MRAC 66 and 75 have numerical contact identification as standard.*

MRAC Series

Miniature Rectangular, Removable Contacts

JACKSCREWS & JACKSOCKETS

Polarized jackscrews give the ease and assurance of threaded positive coupling. The actuating side consists of two turnable screws, one male and one female, each with knurled and slotted knobs. On the mating half are the two fixed screws required to complete the locking action. When mated, the jackscrews may be locked with a safety wire through the hole in the self-locking pin (in the jackscrew shaft).

OUTLINE

Dimensions are for reference only and are subject to change. Outline drawings on request.

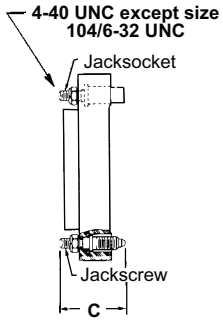

Connector with fixed Jackscrews Code designation: J

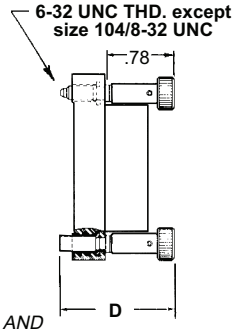

AND

Mating connector half with turnable Jackscrews-with-Knobs. Code designation: JT

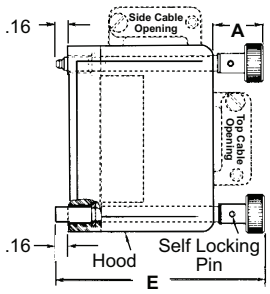

OR

Mating connector half with Hood and turnable Long Jackscrews-with-Knobs. Code designation: JTC H, JTC H1

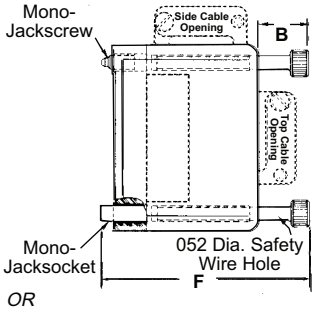

OR

Mating connector half with Hood and turnable Monojacks. Code designation: JTDH, JTDH1

DIMENSIONS

Connector Size	Dimension A					Dimension B				C	D	Dimension E					Dimension F			
	H	H1	H8	H9	H13	H	H1	H8	H9			H	H1	H8	H9	H13	H	H1	H8	H9
MRAC 9	–	.59	–	–	.59	–	–	–	–	.80	1.31	–	2.41	–	–	2.41	–	–	–	–
MRAC 14	–	.59	–	–	.59	–	–	–	–	.80	1.31	–	2.41	–	–	2.41	–	–	–	–
MRAC 18	–	.59	–	–	.59	–	–	–	–	.80	1.31	–	2.41	–	–	2.41	–	–	–	–
MRAC 20	–	.59	–	–	.59	–	–	–	–	.80	1.31	–	2.41	–	–	2.41	–	–	–	–
MRAC 26	.80	.59	.59	.59	–	–	–	–	–	.80	1.31	2.61	2.41	2.41	2.41	–	–	–	–	–
MRAC 34	.63	.63	.63	.63	–	.63	.63	.63	.63	.80	1.31	2.41	2.41	2.41	–	–	–	2.41	2.41	2.41
MRAC 41	.63	.63	–	–	–	–	–	–	–	.80	1.31	2.41	2.41	–	–	–	–	–	–	–
MRAC 42	.58	.58	.58	.58	–	.58	.58	.58	.58	.80	1.31	2.41	2.41	2.41	–	–	2.41	2.41	2.41	2.41
MRAC 50	.58	.58	.58	.58	–	.58	.58	.58	.58	.80	1.31	2.41	2.41	2.41	–	–	2.41	2.41	2.41	2.41
MRAC 66	.69	–	–	.69	–	.5	–	–	.5	.80	1.31	2.41	–	–	2.41	–	2.41	–	–	2.41
MRAC 75	.56	.56	.56	.56	–	.56	.56	.56	.56	.80	1.31	2.41	2.41	2.41	–	–	2.41	2.41	2.41	2.41
MRAC 104	.5	–	–	.67	–	.5	–	–	.5	.80	1.52	3.42	–	–	3.42	–	3.25	–	–	3.25

New Monojacks Assemble and Disassemble With Remarkable Ease and Speed

To free the connector from the hood, simply remove four screws. Monojacks may be used on miniature rectangular connectors with from 34 to 104 contacts and with molds featuring guide hole and two mounting holes on both ends. Molds have 2 center thru holes and 4 mounting holes.

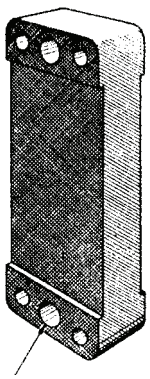

MOLDINGS HAVE STRAIGHT THRU HOLES

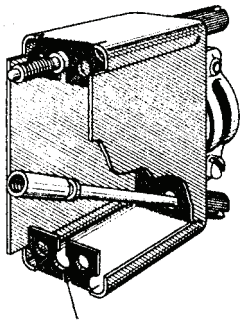

MONOJACKS ARE CAPTIVATED IN KEYHOLE SLOT OF HOOD AS SHOWN ABOVE. WHEN USING SHELLS, MONOJACKS ARE CAPTIVATED IN KEYHOLE OF SHELL AND CLEARANCE HOLES ARE PLACED IN HOODS.

MRAC Series

Miniature Rectangular, Removable Contacts

OUTLINE JACKSCREW & JACKSOCKETS

Dimensions are for reference only and are subject to change. Outline drawings on request.

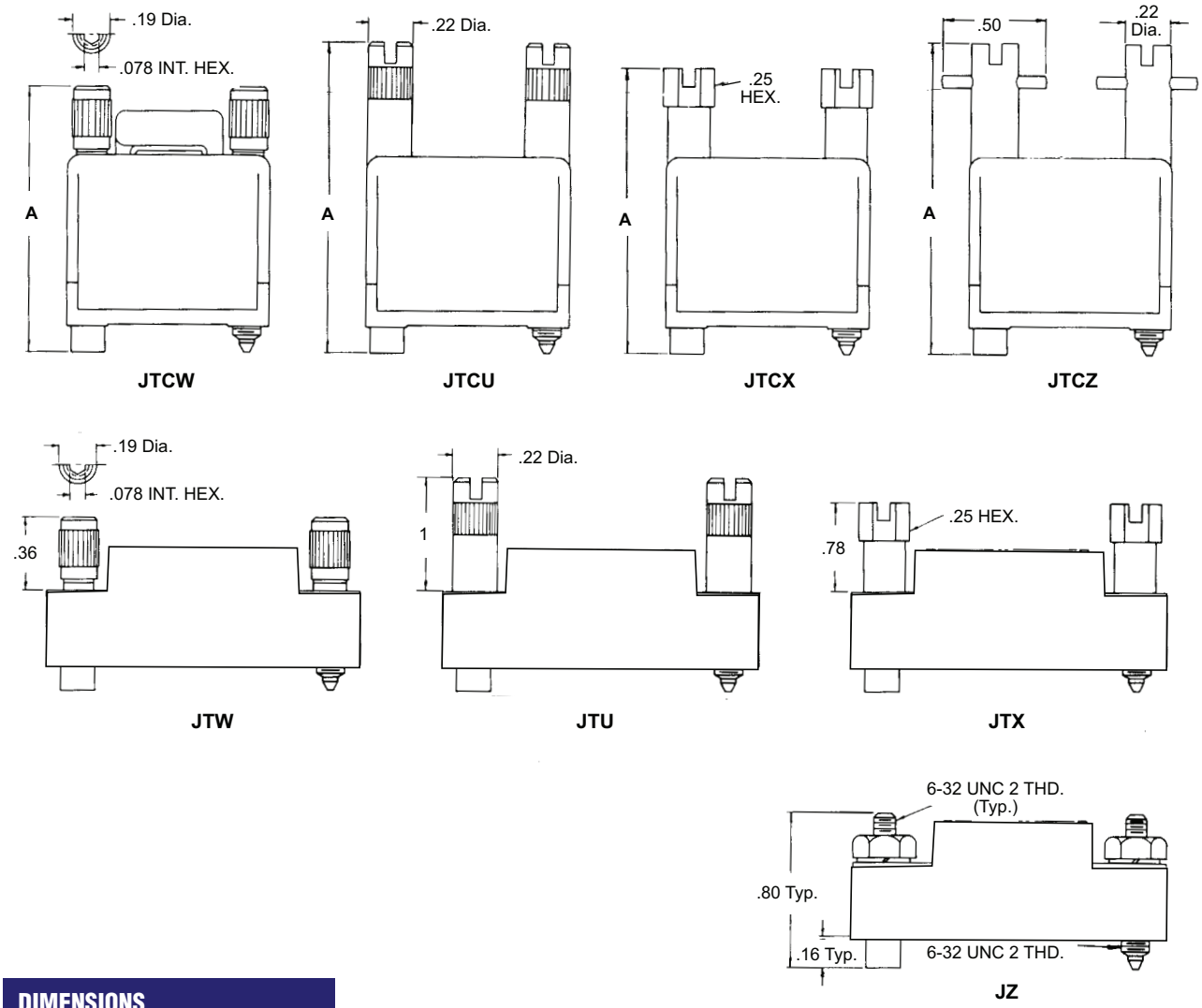

DIMENSIONS

All jackscrews and sockets are stainless steel, passivated except J & JTD which are nickel plated brass.
All knobs are aluminum, anodized except JTW and JTCW which are stainless steel, passivated.

Hood Type

Size	Type JTCW					Size	Type JTCU					Size	Type JTCX					Size	Type JTCZ				
	H	H1	H8	H9	H13		H	H1	H8	H9	H13		H	H1	H8	H9	H13		H	H1	H8	H9	H13
	Dimension A						Dimension A						Dimension A						Dimension A				
9	–	2.22	–	–	2.22	**9**	–	2.47	–	–	2.47	**9**	–	2.34	–	–	2.34	**9**	–	2.47	–	–	2.47
14	–	2.22	–	–	2.22	**14**	–	2.47	–	–	2.47	**14**	–	2.34	–	–	2.34	**14**	–	2.47	–	–	2.47
18	–	2.22	–	–	2.22	**18**	–	2.47	–	–	2.47	**18**	–	2.34	–	–	2.34	**18**	–	2.47	–	–	2.77
20	–	2.22	–	2.22	2.22	**20**	–	2.47	–	2.47	2.47	**20**	–	2.34	–	2.34	2.34	**20**	–	2.47	–	2.47	2.47
26	2.22	2.22	2.22	2.22	–	**26**	2.47	2.47	2.47	2.47	–	**26**	2.61	2.34	2.34	2.34	–	**26**	2.73	2.47	2.47	2.47	–
34	2.22	2.22	2.22	2.22	–	**34**	2.47	2.47	2.47	2.47	–	**34**	2.34	2.34	2.34	2.34	–	**34**	2.47	2.47	2.47	2.47	–
41	2.22	2.22	–	–	–	**41**	2.47	2.47	–	–	–	**41**	2.34	2.34	–	–	–	**41**	2.47	2.47	–	–	–
42	2.22	2.22	2.22	2.22	–	**42**	2.47	2.47	2.47	2.47	–	**42**	2.34	2.34	2.34	2.34	–	**42**	2.47	2.47	2.47	2.47	–
50	2.22	2.22	2.22	2.22	–	**50**	2.47	2.47	2.47	2.47	–	**50**	2.34	2.34	2.34	2.34	–	**50**	2.47	2.47	2.47	2.47	–
66	2.22	–	–	2.22	–	**66**	2.47	–	–	2.47	–	**66**	2.34	–	–	2.34	–	**66**	2.47	–	–	2.47	–
75	2.22	2.22	2.22	2.22	–	**75**	2.47	2.47	2.47	2.47	–	**75**	2.34	2.34	2.34	2.34	–	**75**	2.47	2.47	2.47	2.47	–

Miniature Rectangular, Removable Contacts

OUTLINE
FORMED ALUMINUM HOODS

Dimensions are for reference only and are subject to change. Outline drawings on request.

Hoods shown are MRE Hoods for use with MRAC Connectors

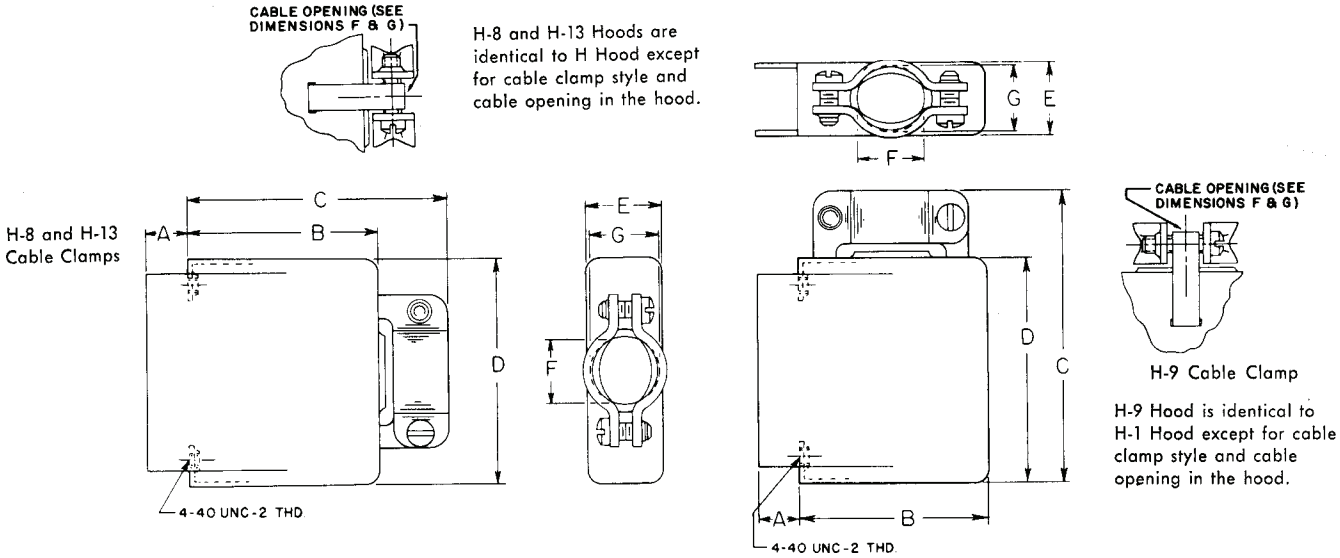

DIMENSIONS

Formed Hoods for MRAC Connectors are available in top and side opening for most MRAC Connectors - Deep Drawn Hoods are available for MRAC 34, MRAC 66 and MRAC 104 connectors ... providing additional strength. Hoods and cable clamps are of anodized aluminum. They provide support and strain relief for the cable and may be applied to either Plug or Receptacle.

Hoods may be ordered separately (see code numbers in the tables below) or assembled on connectors.

Top Cable Opening

Code No.	DIMENSIONS					Cable Opening		Wt.	Fits
	A	B	C	D	E	F	G	Oz.	Connector
MRE9H-13	.28	1.28	1.58	1.31	.44	.59	.31	.3	**MRAC9 (P or S)**
MRE14H-13	.28	1.28	1.58	1.25	.5	.59	.38	.3	**MRAC14 (P or S)**
MRE18H-13	.28	1.28	1.78	1.31	.63	.61	.44	.3	**MRAC18 (P or S)**
MRE20H-13	.28	1.28	1.58	1.56	.5	.66	.38	.3	**MRAC20 (P or S)**
MRE26H	.28	1.28	1.72	1.63	.64	.59	.38	.4	
MRE26H-8	.28	1.28	1.78	1.63	.64	.78	.44	.4	**MRAC26 (P or S)**
MRE34H	.28	1.25	1.69	2	.83	.66D	–	.6	
MRE34H-8	.28	1.25	1.75	2	.83	1.06	.56	.6	**MRAC34 (P or S)**
MRE41H	.28	1.25	1.69	2.63	.5	.66	.44	.6	**MRAC41 (P or S)**
MRE42H	.09	1.30	1.73	2.31	.83	.63D	–	.7	
MRE42H-8	.09	1.30	1.80	2.31	.83	1.06	.56	.7	**MRAC42 (P or S)**
MRE50H	.09	1.30	1.73	2.59	.83	.63D	–	.8	
MRE50H-8	.09	1.30	1.80	2.59	.83	1.06	.56	.8	**MRAC50 (P or S)**
MRE75H	.09	1.31	1.75	2.59	1.19	.63	.88	1.0	
MRE75H-8	.09	1.31	1.86	2.59	1.19	1	.88	1.0	**MRAC75 (P or S)**

Side Cable Opening

Code No.	DIMENSIONS					Cable Opening		Wt.	Fits
	A	B	C	D	E	F	G	Oz.	Connector
MRE9H-1	.28	1.28	1.63	1.31	.44	.31D	–	.3	
MRE9H-9	.28	1.28	1.61	1.31	.44	.59	.31	.3	**MRAC9 (P or S)**
MRE14H-1	.28	1.28	1.69	1.25	.5	.38D	–	.3	
MRE14H-9	.28	1.28	1.55	1.25	.5	.59	.38	.3	**MRAC14 (P or S)**
MRE18H-1	.28	1.28	1.75	1.31	.63	.44D	–	.3	
MRE18H-9	.28	1.28	1.81	1.31	.63	.69	.44	.3	**MRAC18 (P or S)**
MRE20H-1	.28	1.28	2	1.56	.5	.38D	–	.3	
MRE20H-9	.28	1.28	1.86	1.56	.5	.66	.38	.3	**MRAC20 (P or S)**
MRE26H-1	.28	1.28	2.06	1.63	.64	.59	.38	.4	
MRE26H-9	.28	1.28	2.13	1.63	.64	.78	.44	.4	**MRAC26 (P or S)**
MRE34H-1	.28	1.25	2.42	2	.83	.66D	–	.6	
MRE34H-9	.28	1.25	–	2	.83	.81	.56	.6	**MRAC34 (P or S)**
MRE41H-1	.28	1.25	3.06	2.63	.5	.66	.44	.6	**MRAC41 (P or S)**
MRE42H-1	.09	1.30	2.73	2.31	.83	.63	.5	.7	
MRE42H-9	.09	1.30	–	2.31	.83	.84	.56	.7	**MRAC42 (P or S)**
MRE50H-1	.09	1.30	3.02	2.59	.83	.63	.5	.8	
MRE50H-9	.09	1.30	–	2.59	.83	1.06	.56	.8	**MRAC50 (P or S)**
MRE75H-1	.09	1.31	3.02	2.59	1.19	.63	.88	1.0	
MRE75H-9	.09	1.31	–	2.59	1.19	1	.88	1.0	**MRAC75 (P or S)**

MRAC Series

Miniature Rectangular, Removable Contacts

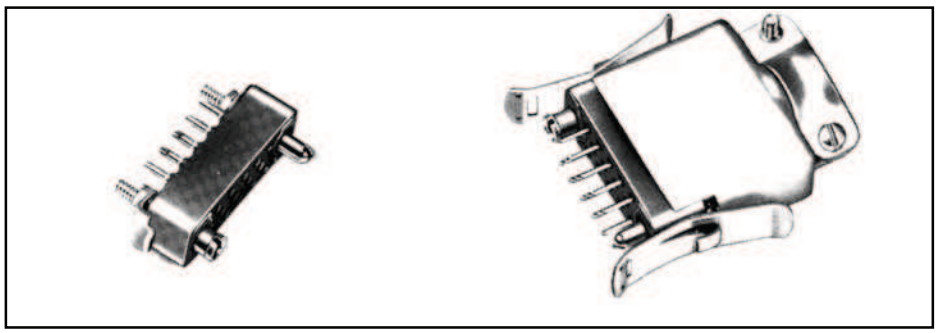

Lock Tabs (MRE-V shown) *Lever & Pivot Assemblies (MRE-VL shown)*

VIBRATION LOCKS

Nomenclature		Used on Connectors
Lever & Pilot Assembly	Lock Tabs (See Note)	
MRE-VL	MRE-V	MRAC 9, 14, 18, 20, 26, 34, 41, and 42
MRE-VL2	MRE-V2	MRAC 50 MRAC 75

Designed for MRAC connectors, this vibration lock features genuine simplicity of design, plus complete locking effectiveness. Assembly of either the lever-and-pivot assembly or the lock parts to the plug and receptacle is quick and easy. The unit locks automatically when the mating plug and receptacle are engaged. Unlocking and disengaging can be done with one hand.

Note 1:When panel mounting the lock-tab half of a MRAC 34, MRAC 42 or MRAC 50 connector, flat washers (.033 minimum thickness) should be used on the mounting screws to shim the molding away from the panel.

Note 2: Each code number indicates two units, i.e., the "MRE-VL" consists of two levers and two pivots (unassembled), and the "MRE-V" consists of two tabs.*

Note 3: These units are supplied unassembled to facilitate handling. The pivot is easily assembled to the lever merely by inserting the hooked end through the lever opening. It will automatically snap into proper position. Patent #2,760,174.

DIMENSIONS / OUTLINE DRAWN ALUMINUM HOODS

Hoods shown are MRA Hoods for use with MRAC Connectors

Code No.	DIMENSIONS - Top Opening							Wt. Oz.	Fits Connector
	A	B	C	D	E	H	G		
MRA 34H-491	2.08	.83	1.17	1.59	.66 x .75	–	1.688	.6	MRAC 34P MRAC 34S
MRA 66H	2.38	1.22	1.17	1.69	1.03 Dia.	–	1.969	.8	MRAC 66P MRAC 66S
MRA 104H	2.84	1.63	2.23	2.75	1.19 Dia.	–	2.375	1.0	MRAC 104P MRAC 104S

Code No.	DIMENSIONS - Side Opening							Wt. Oz.	Fits Connector
	A	B	C	D	E	H	G		
MRA 34H9-491	2.08	.83	1.17	2.59	.64 x .75	1.06	1.688	.6	MRAC 34P MRAC 34S
MRA 66H9	2.38	1.22	1.17	2.92	.84 Dia.	1.34	1.969	.8	MRAC 66P MRAC 66S
MRA 104H9	2.84	1.63	2.23	3.39	1.19 Dia.	1.63	2.375	1.0	MRAC 104P MRAC 104S

Dimensions are for reference only and are subject to change. Outline drawings on request.

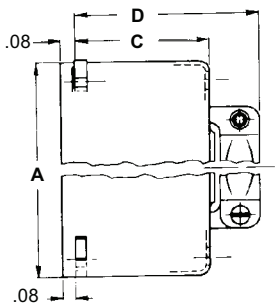

Top Cable Opening

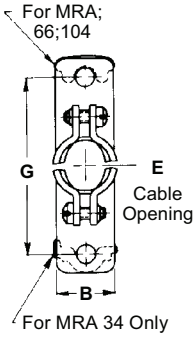

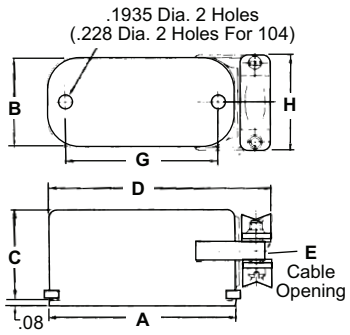

Side Cable Opening

DIMENSIONS / OUTLINE MOUNTING BRACKETS

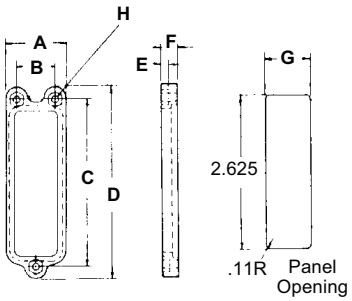

MRAC 50 and MRAC 75 connectors use the standard MRE 50 and MRE 75 mounting brackets.

Code No.	DIMENSIONS								Wt. Oz.
	A	B	C	D	E	F	G	H	
MRE 50B	1.06	.688	3.031	3.44	.13	.28	.78	.128 Dia 3 Holes (No. 4 Mounting Screw)	.4
MRE 75B	1.48	1.047	3.062	3.56	.14	.30	1.14	.150 Dia 3 Holes (No. 6 Mounting Screw)	.6

MRAC Series — Miniature Rectangular, Removable Contacts

ORDERING INFORMATION

Omit steps not required

MRAC	34	S	G	H	VL	

■ Step 1

Series:

MRAC

MNAC
Numerical contact identification on sizes 34, 50, and 104.

■ Step 2

Number of Contacts:

9, 14, 18, 20, 26, 34, 41, 42, 50, 66, 75, 104

See note 1 below.

■ Step 3

Contact Designation:

P - Pin

S - Socket

When ordering moldings less hardware to be used with monojacks, see note 2 below.

■ Step 4

Guides and Jackscrew Locks:

(See bottom Chart)

■ Step 5

Hoods:

H - Standard top opening. Sizes 26 thru 104 only.

H1 - Standard side opening. Available all sizes.

H8 - Large top opening. Sizes 26 thru 104 only.

H9 - Large side opening. Available all sizes.

H13 - Large top opening, high hood. Sizes 9, 14, 18 & 20 only.

■ Step 6

Vibration Locks:

V - Lock Tab

V2 - Lock Tab (Size 50 & 75)

VL - Lever & Pivot Ass'y

VL2 - Lever & Pivot Ass'y (Size 50 & 75)

■ Step 7

Special Options:

Consult Sales Department

■ Step 4

Guides

G* Phosphor Bronze Cylindrical Guides

K Beryllium Copper Cylindrical Guides

N* Brass Cylindrical Guides

Guides are not recommended for Size 104

"P" indicates two guide pins or two jackscrews (EX. JTCP)

"S" indicates two guide sockets or two jacksockets (Ex. GS)

Jackscrew Locks

***J Polarized Fixed Jackscrew and Jacksocket

JT Polarized Short Turning Jackscrew and Jacksocket

JTC Polarized Long Turning Jackscrew and Jacksocket

***JTD Polarized Long Turning Mono-Jackscrew and Mono-Jacksocket for Sizes 34, 42, 50, 66, 75, and 104 only.

**JZ Same as J but with 6-32 mtg. thd. (Std. on 104)

**JTW Same as JT but with knurled round knob with internal hex (not avail. 104)

**JTU Same as JT but with knurled round knob with screwdriver slot (not avail. 104)

**JTX Same as JT but with hex knob (not avail. 104)

**JTCW Same as JTC but with knurled round knob with internal hex (not avail. 104)

**JTCU Same as JTC but with knurled round knob with screwdriver slot (not avail. 104)

**JTCX Same as JTC but with hex knob (not avail. 104)

**JTCZ Same as JTC but with prybar knob (not avail. 104)

* *For passivated stainless steel add SS suffix.*

** *Request availablity information.*

*** *Material: Nickel Plated Brass standard*

Notes: 1. Contacts are ordered separately. See 100 Series contact section of Rack & Panel

2. When ordering molding less hardware and hood for use with JTD Monojacks, connectors must be ordered as follows:

Pin connector = MRAC 34P8, MRAC 42P8, etc.

Socket connector = MRAC 34S8, MRAC 42S8, etc.

The number "8" indicates special housing for use with the JTD Monojack hardware (available on sizes 34, 42, 50, 66, 75 and 104).