Cascadable Silicon Bipolar MMIC Amplifier

Technical Data

MSA-0885

Features

- **Usable Gain to 6.0 GHz**
- **High Gain:**
  32.5 dB Typical at 0.1 GHz
  22.5 dB Typical at 1.0 GHz
- **Low Noise Figure:**
  3.3 dB Typical at 1.0 GHz
- **Low Cost Plastic Package**

Description

The MSA-0885 is a high performance silicon bipolar Monolithic Microwave Integrated Circuit (MMIC) housed in a low cost plastic package. This MMIC is designed for use as a general purpose 50 Ω gain block above 0.5 GHz and can be used as a high gain transistor below this frequency. Typical applications include narrow and moderate band IF and RF amplifiers in commercial and industrial applications.

The MSA-series is fabricated using HP's 10 GHz f_T, 25 GHz f_{MAX}, silicon bipolar MMIC process which uses nitride self-alignment, ion implantation, and gold metallization to achieve excellent performance, uniformity and reliability. The use of an external bias resistor for temperature and current stability also allows bias flexibility.

85 Plastic Package

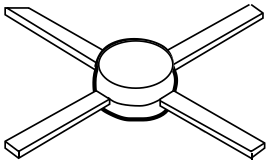

Typical Biasing Configuration

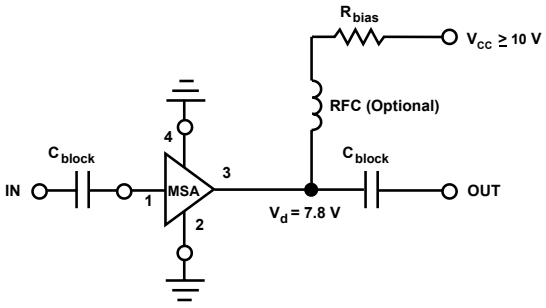

MSA-0885 Absolute Maximum Ratings

Parameter	Absolute Maximum[1]
Device Current	65 mA
Power Dissipation[2,3]	500 mW
RF Input Power	+13 dBm
Junction Temperature	150°C
Storage Temperature	–65°C to 150°C

Thermal Resistance[2,4]:
θ_{jc} = 130°C/W

Notes:
1. Permanent damage may occur if any of these limits are exceeded.
2. T_{CASE} = 25°C.
3. Derate at 7.7 mW/°C for T_C > 85°C.
4. See MEASUREMENTS section "Thermal Resistance" for more information.

Electrical Specifications[1], T_A = 25°C

Symbol	Parameters and Test Conditions: I_d = 36 mA, Z_O = 50 Ω		Units	Min.	Typ.	Max.
G_P	Power Gain ($\|S_{21}\|^2$)	f = 0.1 GHz f = 1.0 GHz	dB	 21.0	32.5 22.5	
VSWR	Input VSWR	f = 0.1 to 3.0 GHz			1.9:1	
	Output VSWR	f = 0.1 to 3.0 GHz			1.6:1	
NF	50 Ω Noise Figure	f = 1.0 GHz	dB		3.3	
$P_{1\,dB}$	Output Power at 1 dB Gain Compression	f = 1.0 GHz	dBm		12.5	
IP_3	Third Order Intercept Point	f = 1.0 GHz	dBm		27.0	
t_D	Group Delay	f = 1.0 GHz	psec		125	
V_d	Device Voltage		V	6.2	7.8	9.4
dV/dT	Device Voltage Temperature Coefficient		mV/°C		–17.0	

Note:
1. The recommended operating current range for this device is 20 to 40 mA. Typical performance as a function of current is on the following page.

MSA-0885 Typical Scattering Parameters[1] (Z_O = 50 Ω, T_A = 25°C, I_d = 36 mA)

Freq. GHz	S_{11}		S_{21}			S_{12}			S_{22}		k
	Mag	Ang	dB	Mag	Ang	dB	Mag	Ang	Mag	Ang	
0.1	.64	–21	32.5	42.29	160	–36.5	.015	40	.61	–24	0.78
0.2	.58	–39	31.3	36.89	144	–32.8	.023	50	.54	–45	0.67
0.4	.44	–65	28.7	27.20	120	–29.4	.034	54	.42	–77	0.69
0.6	.36	–82	26.3	20.57	106	–27.2	.044	53	.33	–98	0.77
0.8	.31	–95	24.3	16.31	96	–25.2	.055	53	.28	–115	0.83
1.0	.27	–105	22.5	13.36	87	–24.2	.061	51	.25	–129	0.87
1.5	.24	–125	19.3	9.24	71	–21.4	.085	50	.18	–153	0.96
2.0	.26	–147	16.7	6.82	56	–19.7	.103	47	.15	–173	0.98
2.5	.29	–159	14.9	5.57	48	–18.4	.120	44	.12	180	1.00
3.0	.34	–175	13.1	4.51	37	–17.7	.130	42	.09	165	1.03
3.5	.38	172	11.6	3.80	25	–16.9	.144	37	.06	172	1.04
4.0	.42	161	10.1	3.21	14	–16.3	.153	33	.04	–139	1.06
5.0	.48	135	7.7	2.43	–7	–15.6	.167	24	.09	–90	1.09
6.0	.60	102	5.5	1.88	–29	–14.9	.179	17	.08	–140	1.06

Note:
1. A model for this device is available in the DEVICE MODELS section.

Typical Performance, T_A = 25°C
(unless otherwise noted)

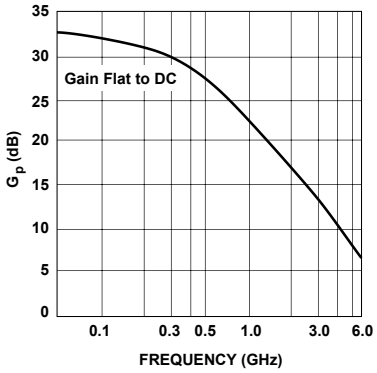

Figure 1. Typical Power Gain vs. Frequency, I_d = 36 mA.

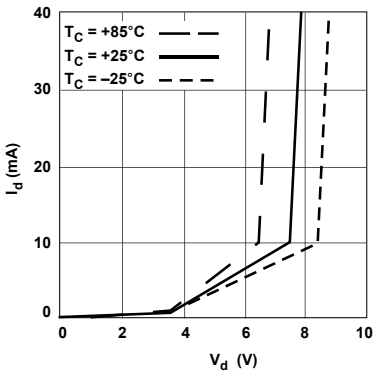

Figure 2. Device Current vs. Voltage.

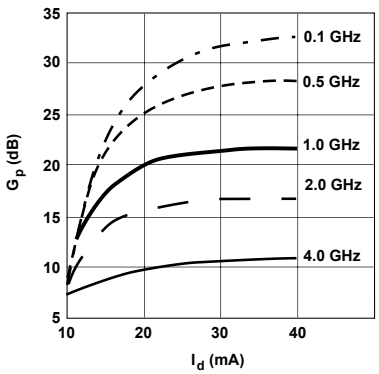

Figure 3. Power Gain vs. Current.

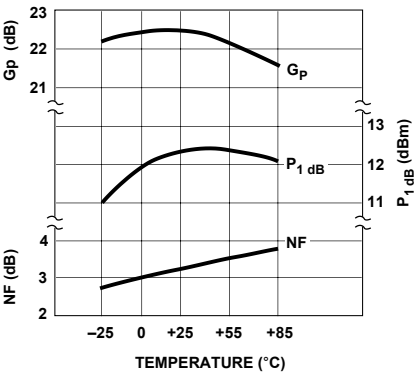

Figure 4. Output Power at 1 dB Gain Compression, NF and Power Gain vs. Case Temperature, f = 1.0 GHz, I_d=36mA.

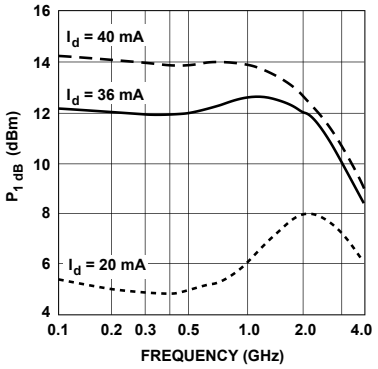

Figure 5. Output Power at 1 dB Gain Compression vs. Frequency.

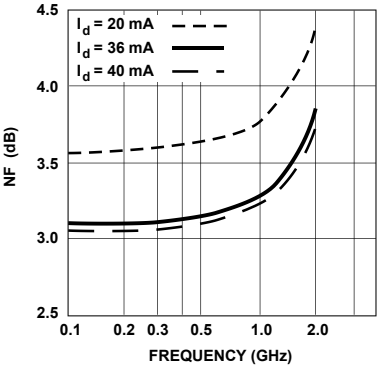

Figure 6. Noise Figure vs. Frequency.
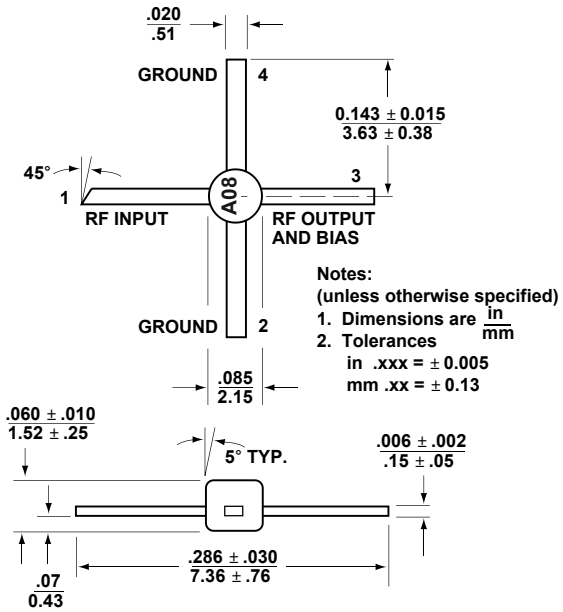
85 Plastic Package Dimensions