BNC.HT series

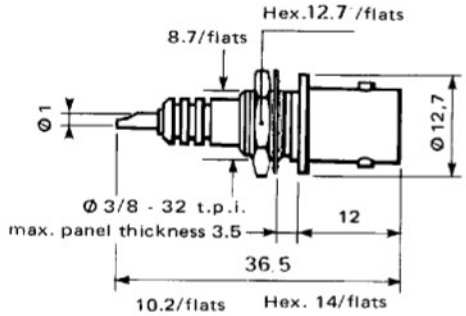

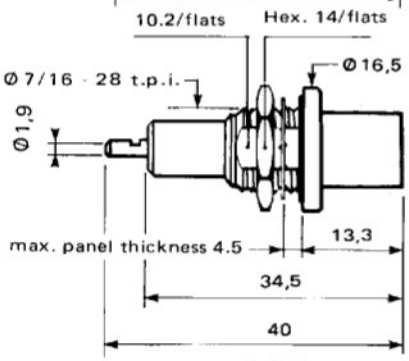

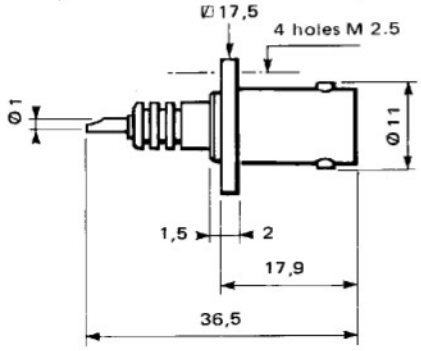

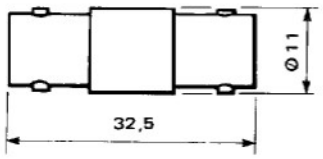

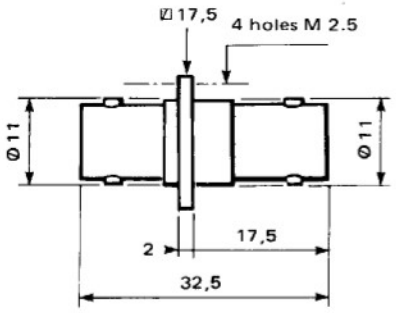

CODE No.	STYLE	Cable Group Ω		Assembly code	Panel Piercing	Weight (g)
RECEPTACLES						
R 316 553	Bulkhead mounting				d 28	8,5
R 316 603	Bulkhead mounting panel seal – Watertight : – 40°C + 70°C – at pressure : 3.5 bar max.				d 29	15
R 316 405	Square flange mounting Interchangeable with UG. 931/U				a 14	10
ADAPTORS						
R 316 704	Straight female - female					11
R 316 714	Square flange female - female				a 14	19